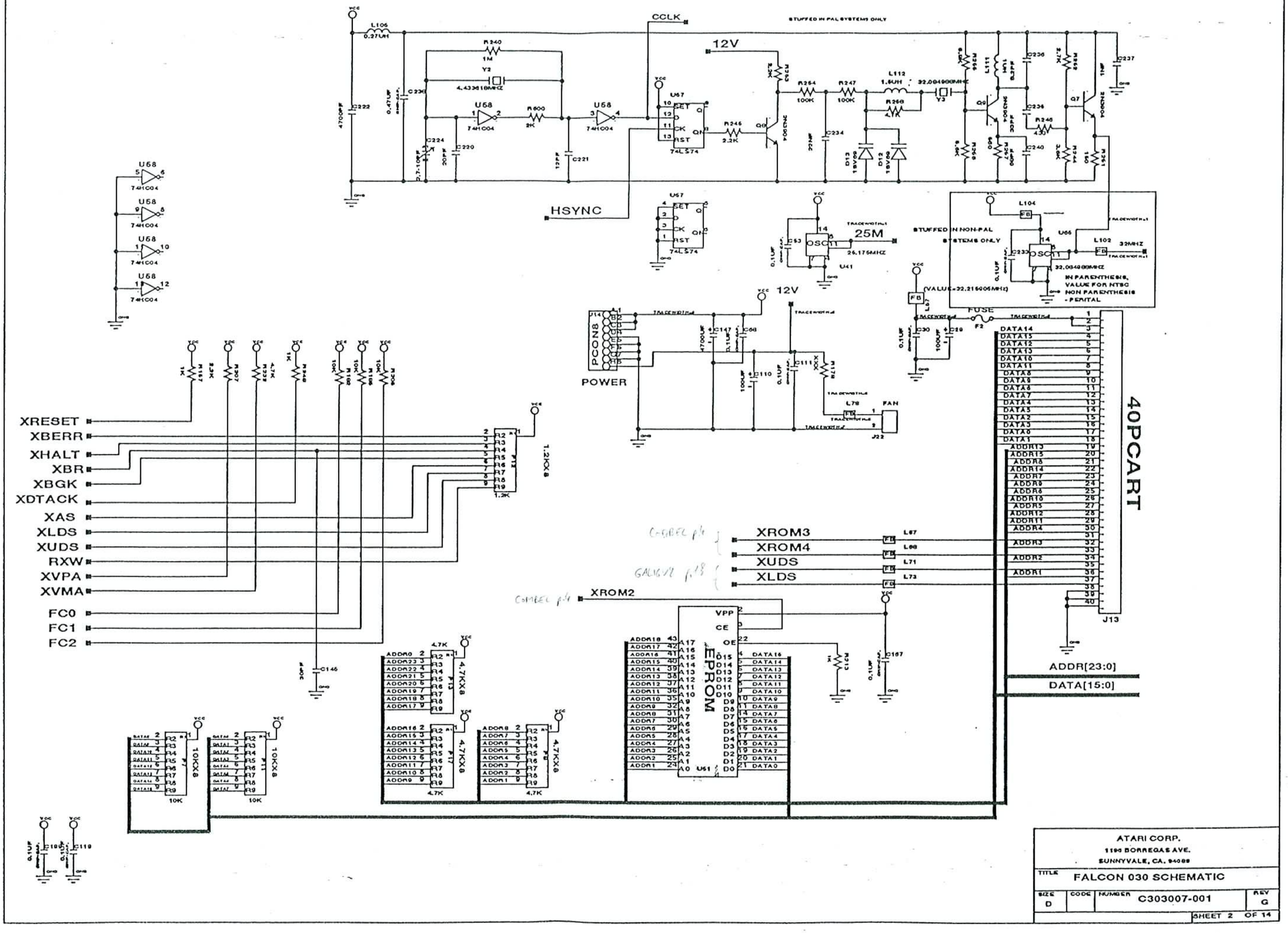
CCLK
12V
HSYNC
STUFFED IN PAL SYSTEMS ONLY
STUFFED IN NON-PAL SYSTEMS ONLY
IN PARENTHESIS, VALUE FOR NTSC
NON PARENTHESIS - PENTAL
25M
32MHZ
FUSE
POWER
PCON8
FAN
XRESET
XBERR
XHALT
XBR
XBGK
XDTACK
XAS
XLDS
XUDS
RXW
XVPA
XVMA
FC0
FC1
FC2
XROM3
XROM4
XUDS
XLDS
XROM2
EPROM
40PCART
ADDR[23:0]
DATA[15:0]
ATARI CORP.
1196 BORREGAS AVE.
SUNNYVALE, CA. 94089
TITLE
FALCON 030 SCHEMATIC
SIZE D
CODE
NUMBER C303007-001
REV G
SHEET 2 OF 14

* - OPTIONAL COMPONENTS

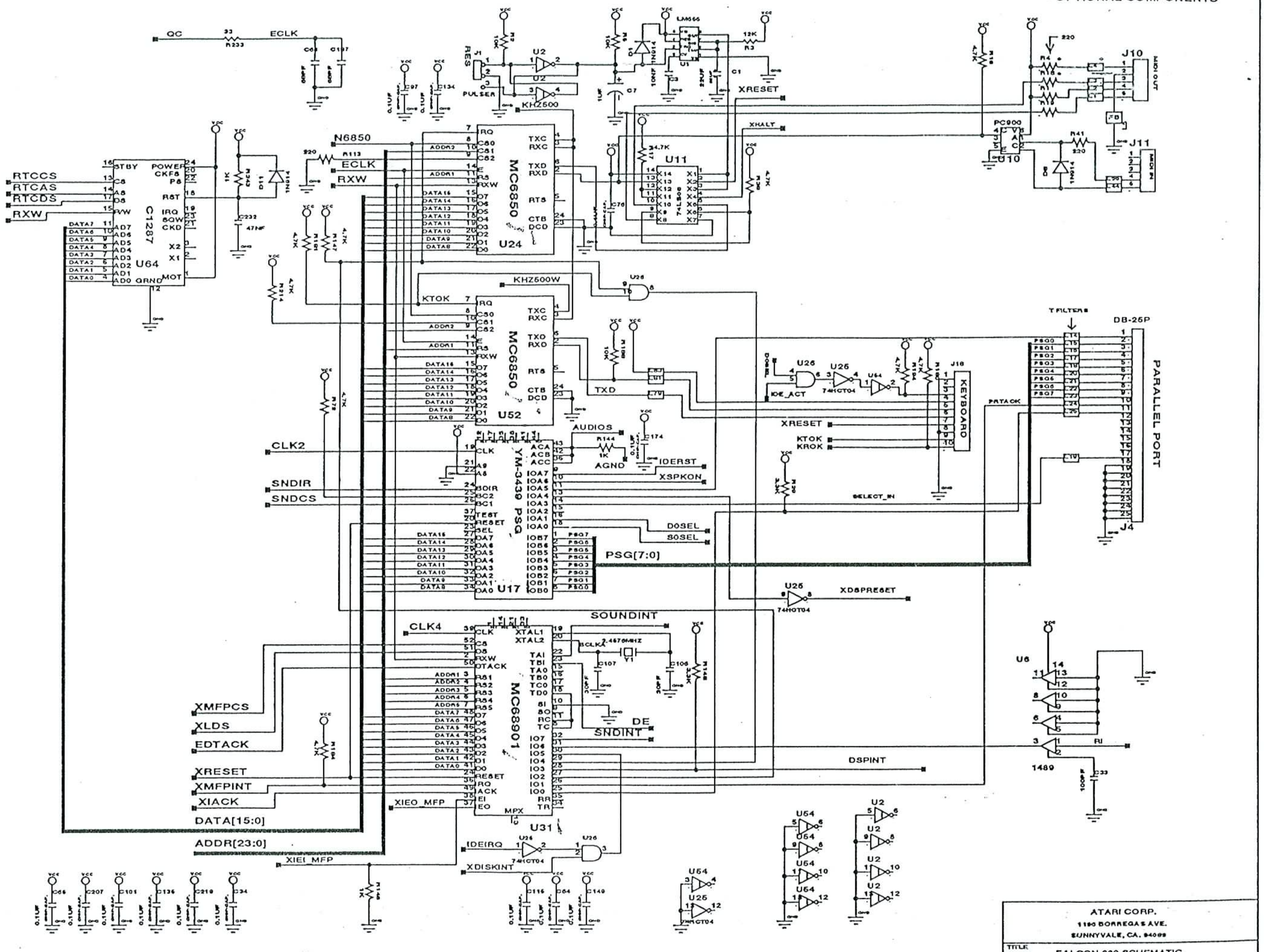

ATARI CORP.
1196 BORREGAS AVE.
SUNNYVALE, CA. 94089

TITLE: FALCON 030 SCHEMATIC

SIZE	CODE	NUMBER	REV
D		C303007-001	G

SHEET 3 OF 14

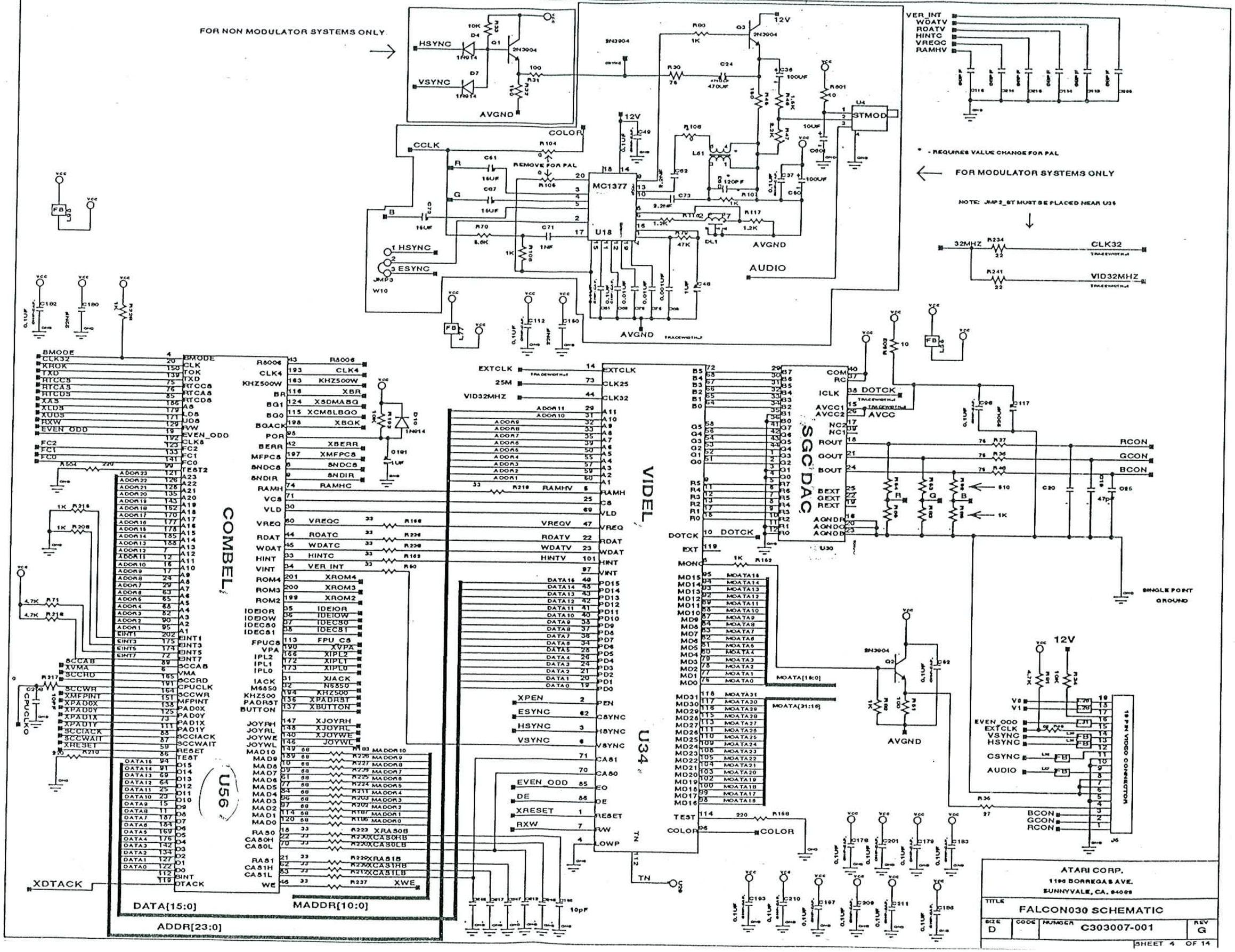
FOR NON MODULATOR SYSTEMS ONLY
HSYNC
VSYNC
AVGND
COLOR
CCLK
REMOVE FOR PAL
MC1377
U18
AUDIO
STMOD
U4
VER_INT
WDATV
ROATV
HINTC
VREQC
RAMHV
* - REQUIRES VALUE CHANGE FOR PAL
FOR MODULATOR SYSTEMS ONLY
NOTE: JMP2_ST MUST BE PLACED NEAR U36
32MHZ
CLK32
VID32MHZ
COMBEL
U56
VIDEL
U34
SGC DAC
U30
EXTCLK
25M
VID32MHZ
DOTCK
AVCC
RCON
GCON
BCON
SINGLE POINT GROUND
COLOR
MOATA[16:0]
MOATA[31:16]
12V
AVGND
EVEN_ODD
VSYNC
HSYNC
CSYNC
AUDIO
J5
XDTACK
DATA[15:0]
MADDR[10:0]
ADDR[23:0]
ATARI CORP.
1196 BORREGAS AVE.
SUNNYVALE, CA. 94089
TITLE
FALCON030 SCHEMATIC
SIZE D
CODE
NUMBER C303007-001
REV G
SHEET 4 OF 14

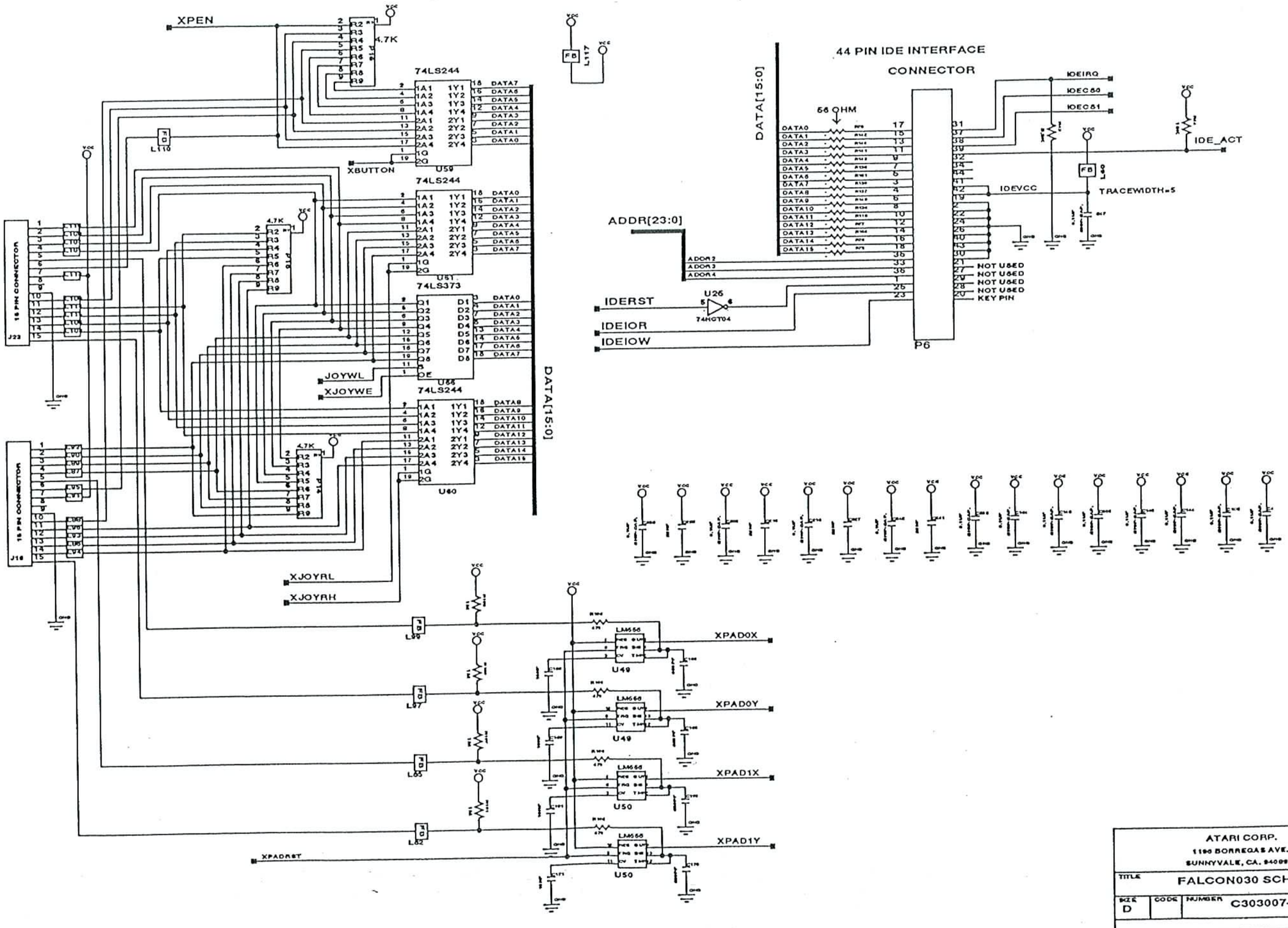

ATARI CORP.
1196 BORREGAS AVE.
SUNNYVALE, CA. 94089

TITLE FALCON030 SCHEMATIC

SIZE	CODE	NUMBER	REV
D		C303007-001	G

SHEET 6 OF 14

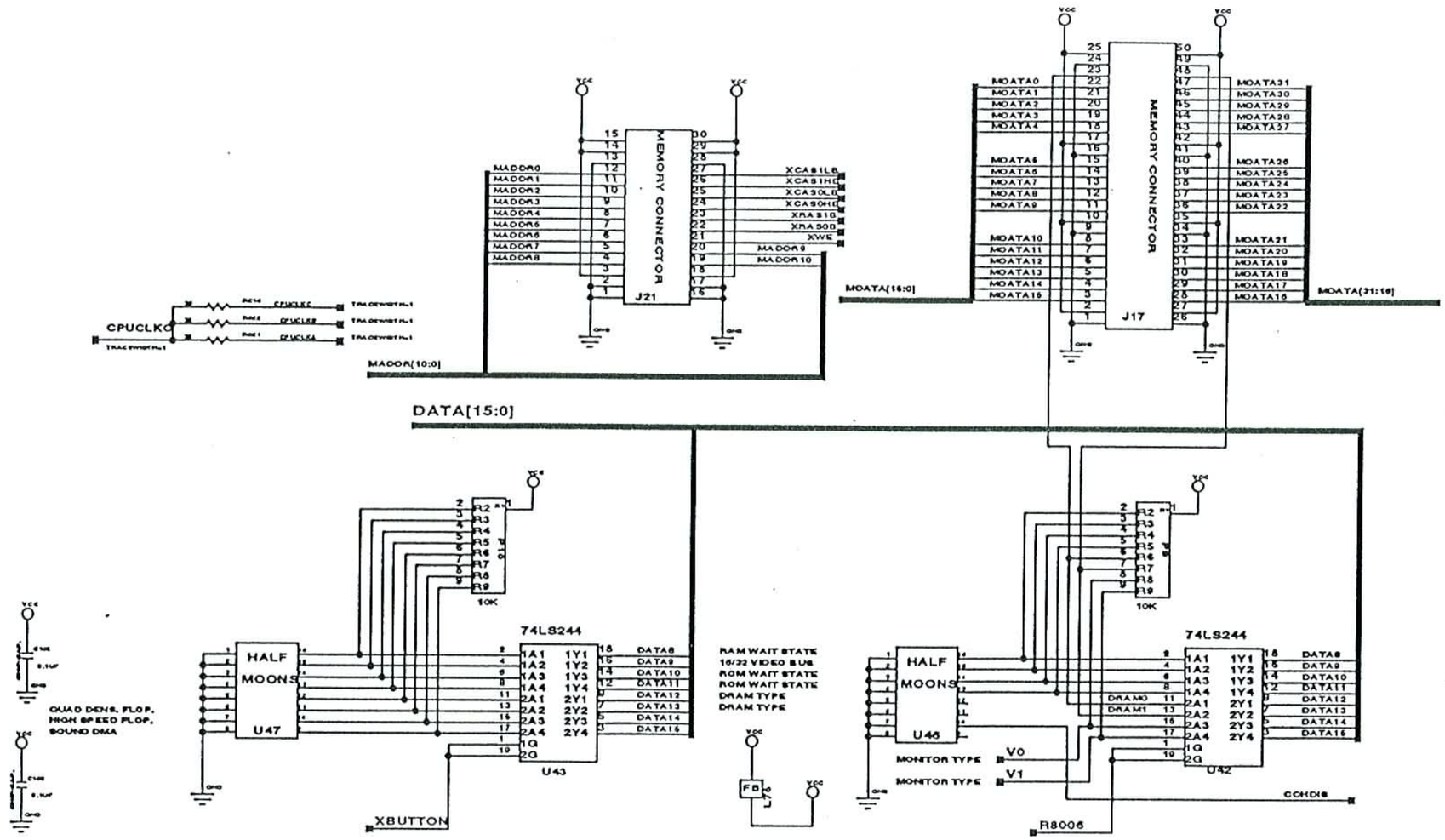

ATARI CORP.
1196 BORREGAS AVE.
SUNNYVALE, CA. 94089

TITLE: FALCON030 SCHEMATIC

SIZE	CODE	NUMBER	REV
D		C303007-001	G

SHEET 6 OF 14

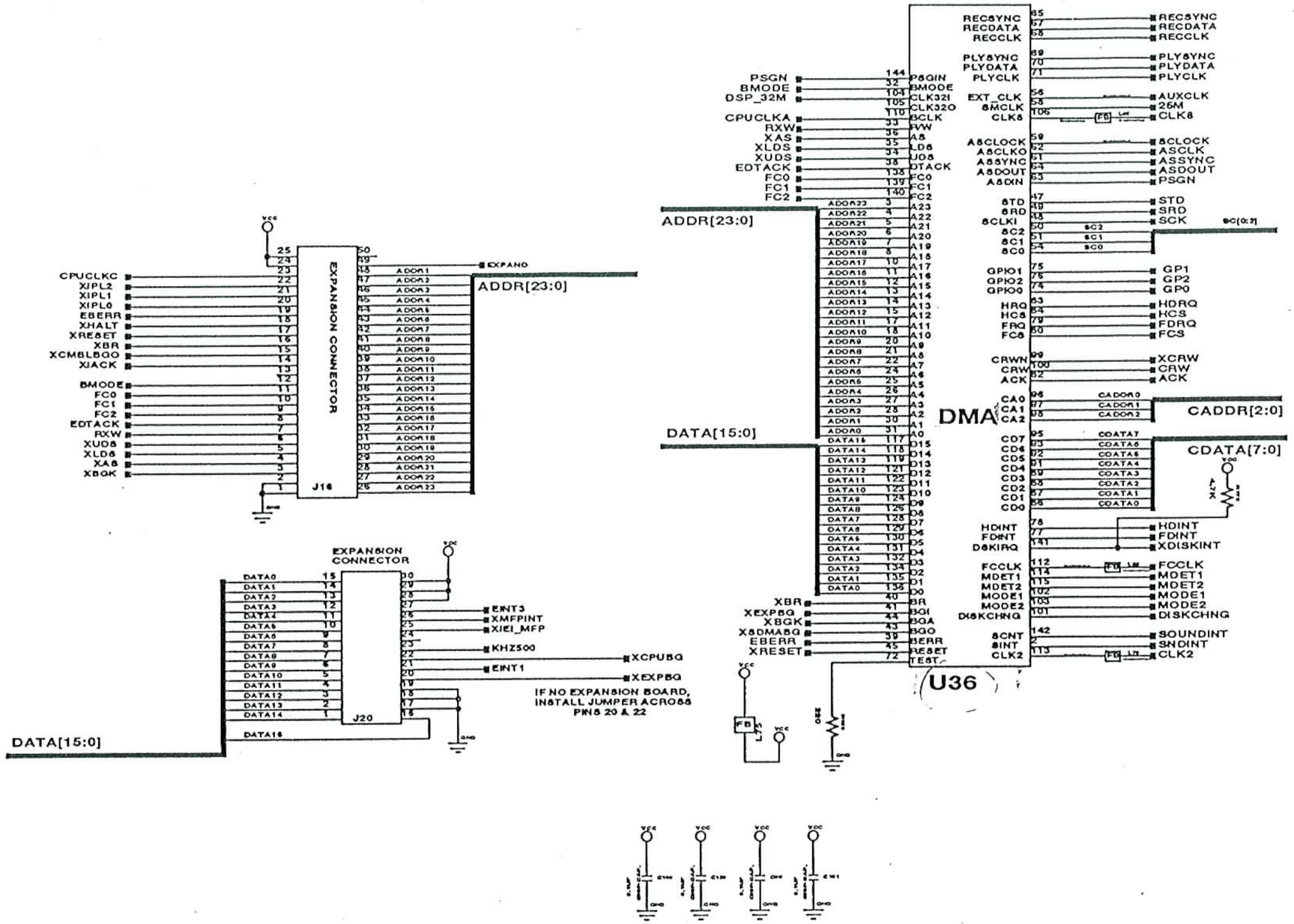

ATARI CORP.
1196 BORREGAS AVE.
SUNNYVALE, CA. 94089

TITLE	FALCON030 SCHEMATIC	
SIZE D	CODE	NUMBER C303007-001	REV G

SHEET 7 OF 14

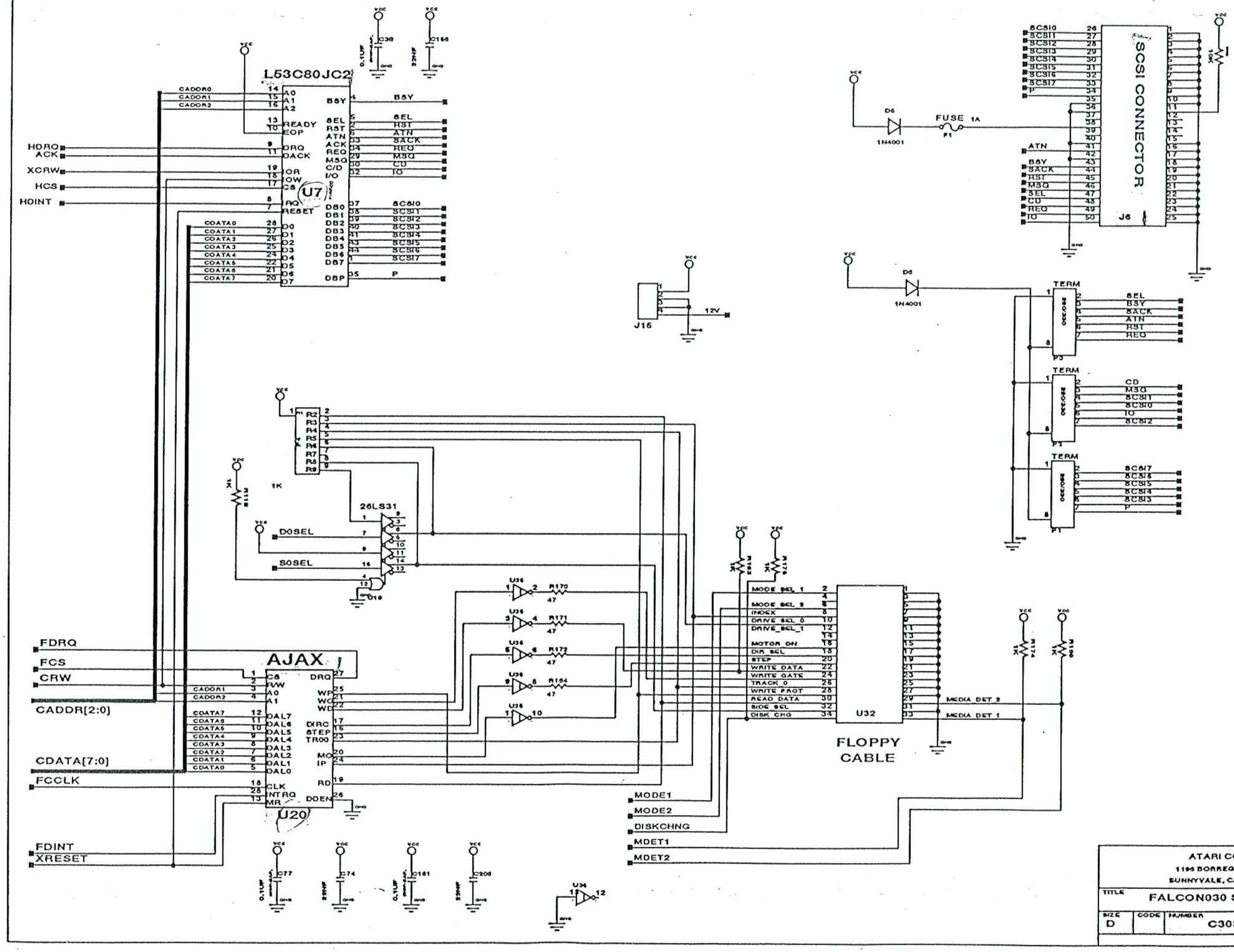

ATARI CORP.
1196 BORREGAS AVE.
SUNNYVALE, CA. 94089

TITLE: FALCON030 SCHEMATIC

SIZE	CODE	NUMBER	REV
D		C303007-001	G

SHEET 8 OF 14

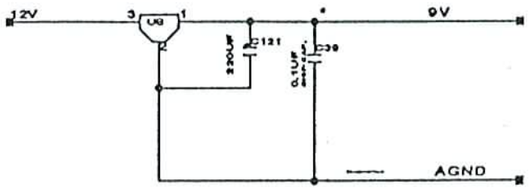

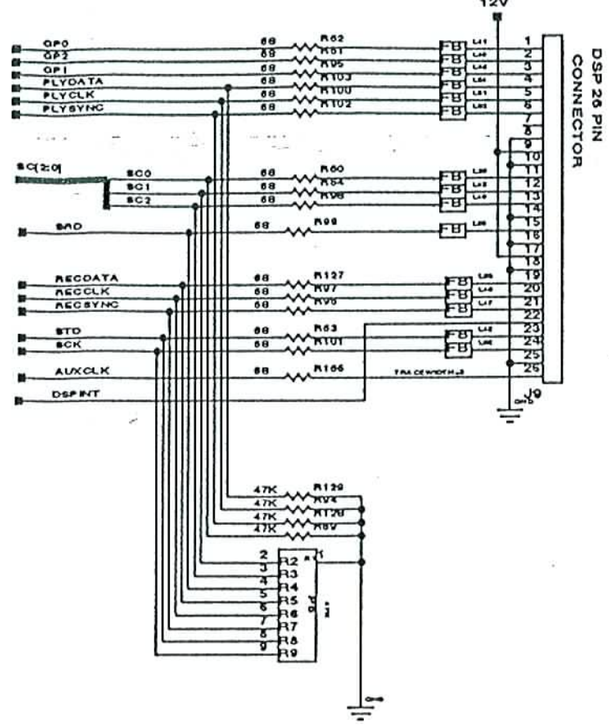

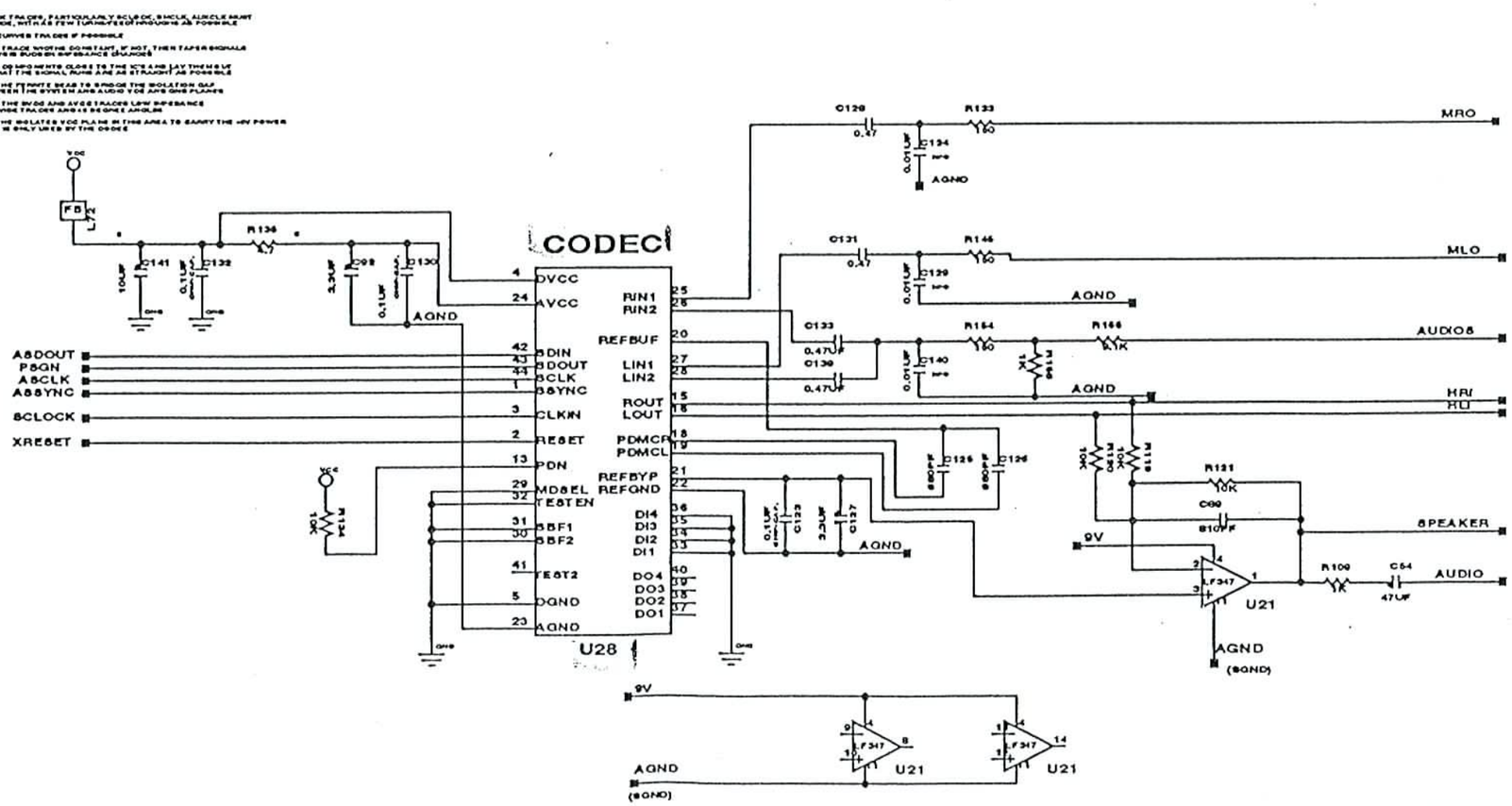

ATARI CORP. 1196 BORREGAS AVE. SUNNYVALE, CA. 94089	
TITLE	FALCON030 SCHEMATIC
SIZE D / CODE / NUMBER	C303007-001 / REV G
	SHEET 9 OF 14

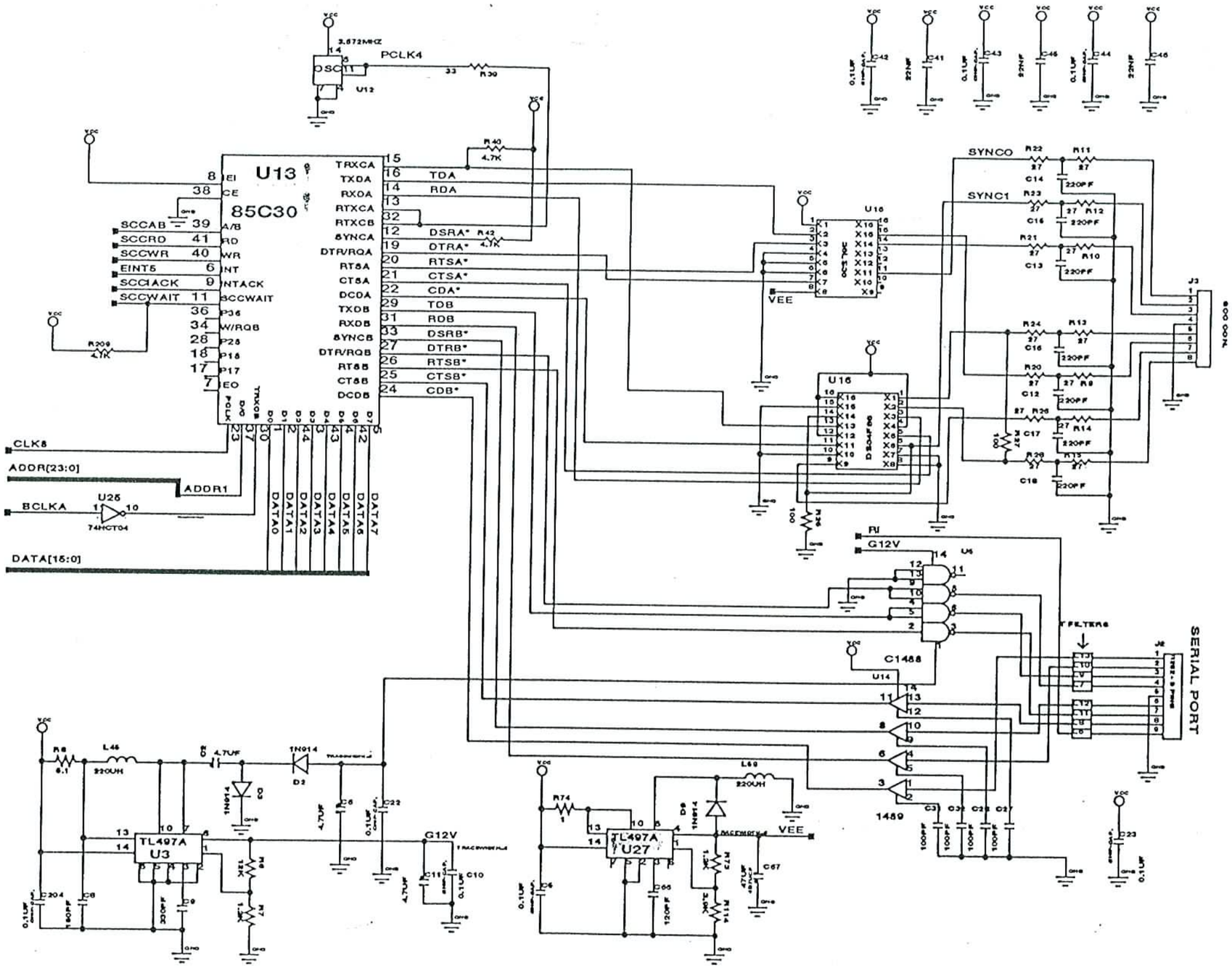

ATARI CORP.
1196 BORREGAS AVE.
SUNNYVALE, CA. 94089

TITLE			
FALCON030 SCHEMATIC			
SIZE D	CODE	NUMBER C303007-001	REV G
			SHEET 10 OF 14

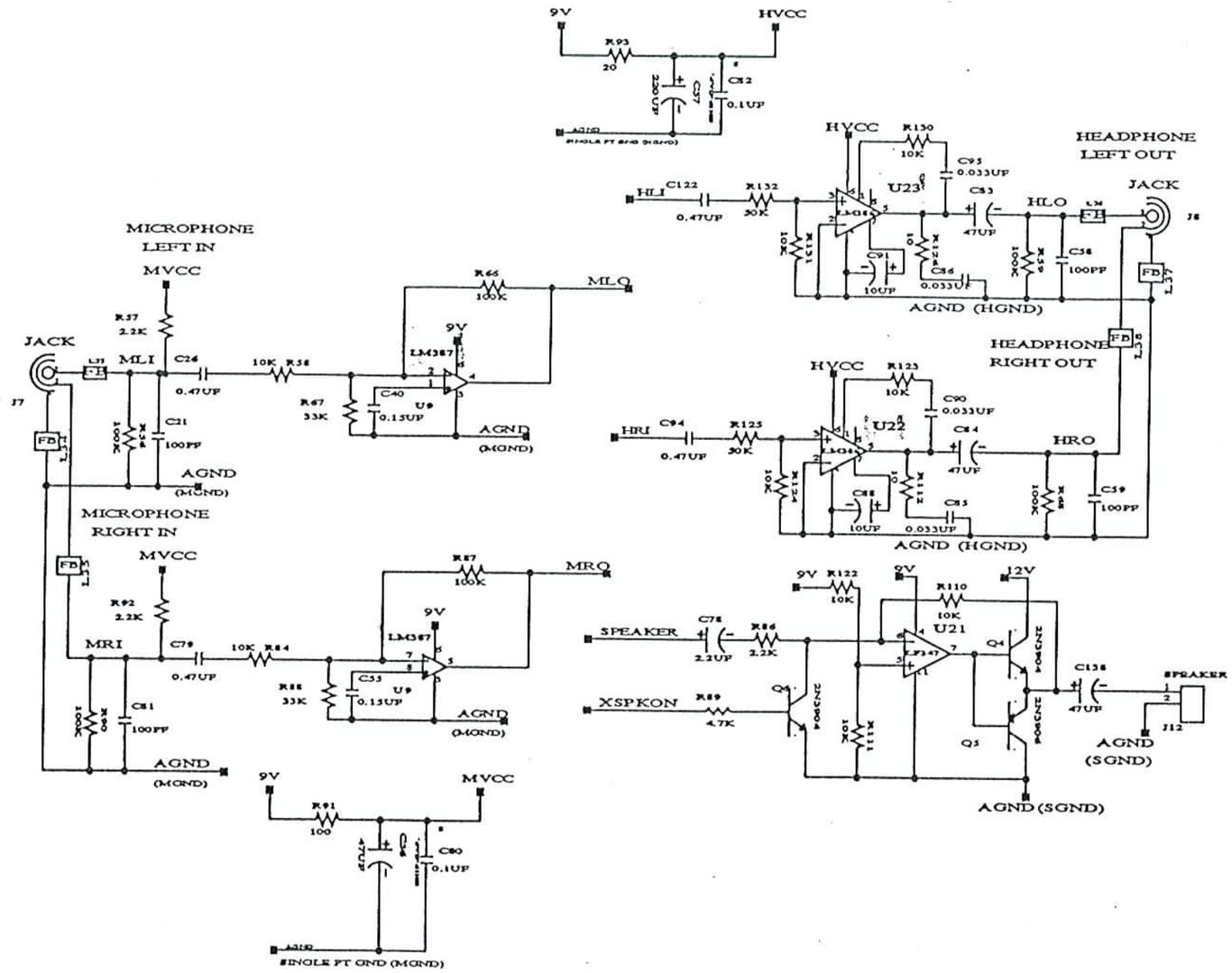

ATARI CORP.
1196 BORREGAS AVE.
SUNNYVALE, CA. 94089

TITLE: FALCON030 SCHEMATIC

SIZE	CODE	NUMBER	REV
D		C303007-001	G

SHEET 11 OF 14

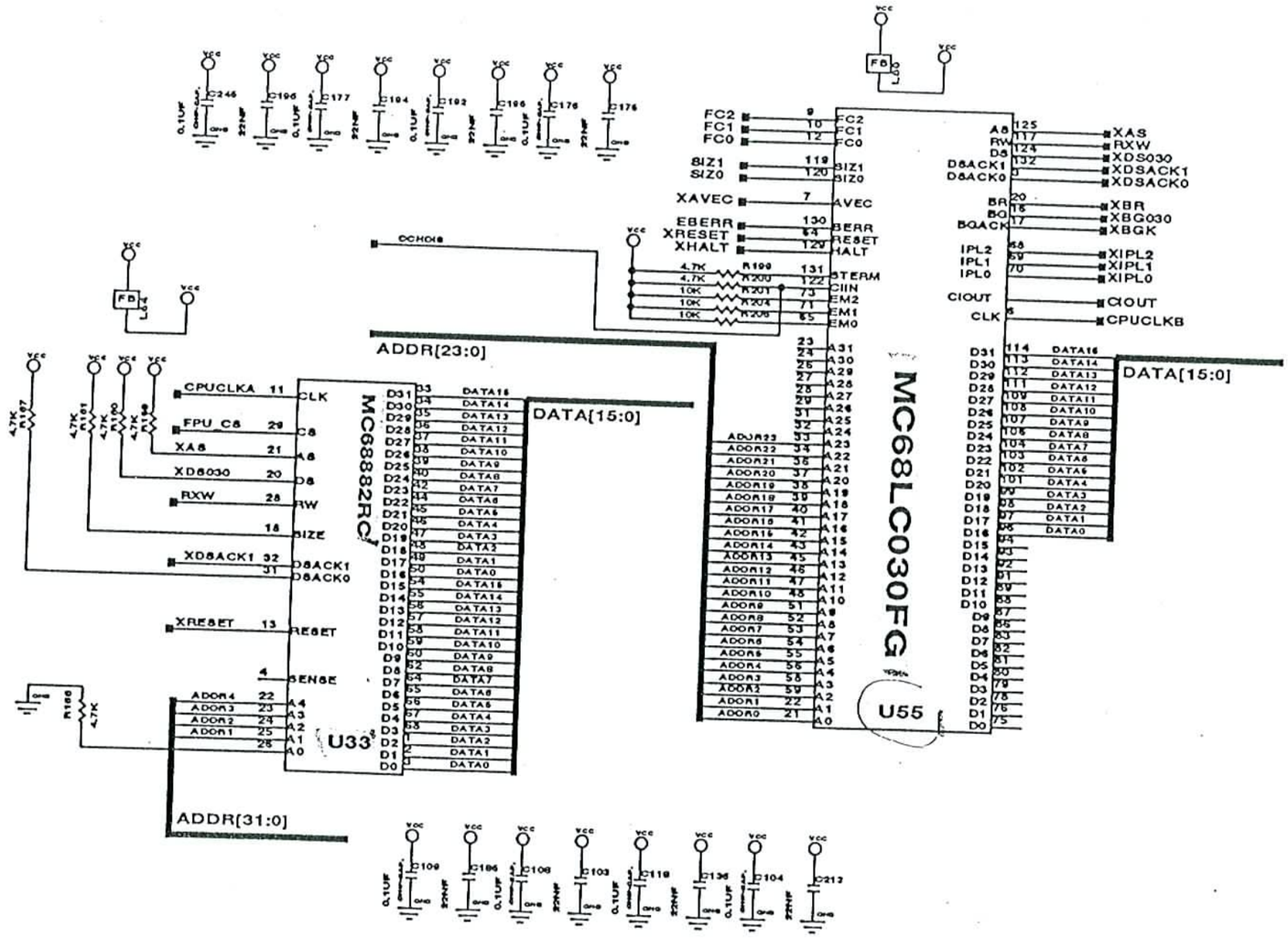

ATARI CORP.
1196 BORREGAS AVE.
SUNNYVALE, CA. 94089

TITLE			
FALCON030 SCHEMATIC			
SIZE D	CODE	NUMBER C303007-001	REV G
			SHEET 12 OF 14

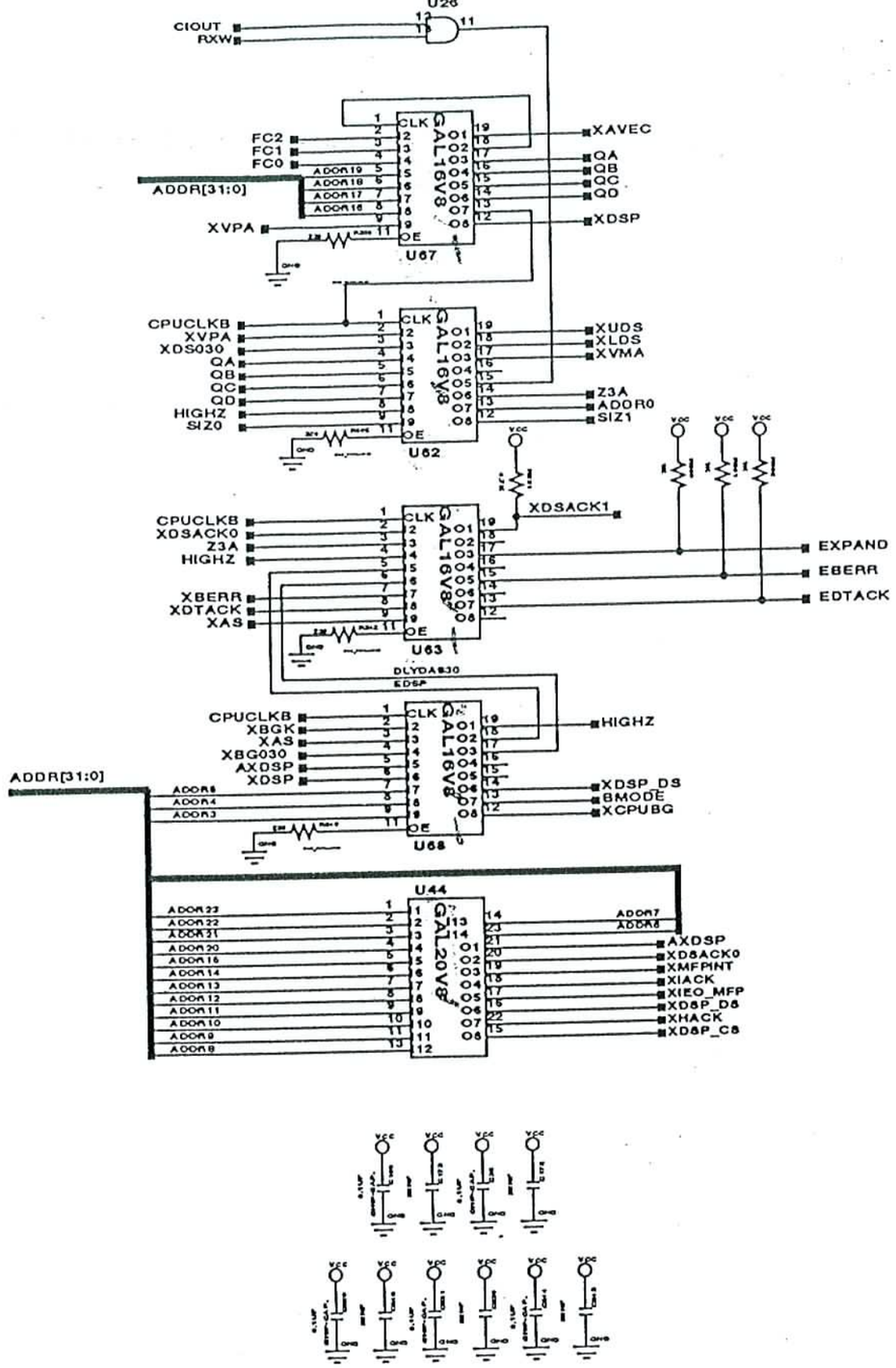

ATARI CORP.
1196 BORREGAS AVE.
SUNNYVALE, CA. 94089

TITLE	FALCON030 SCHEMATIC	
SIZE D	CODE	NUMBER C303007-001	REV G
		SHEET 13 OF 14

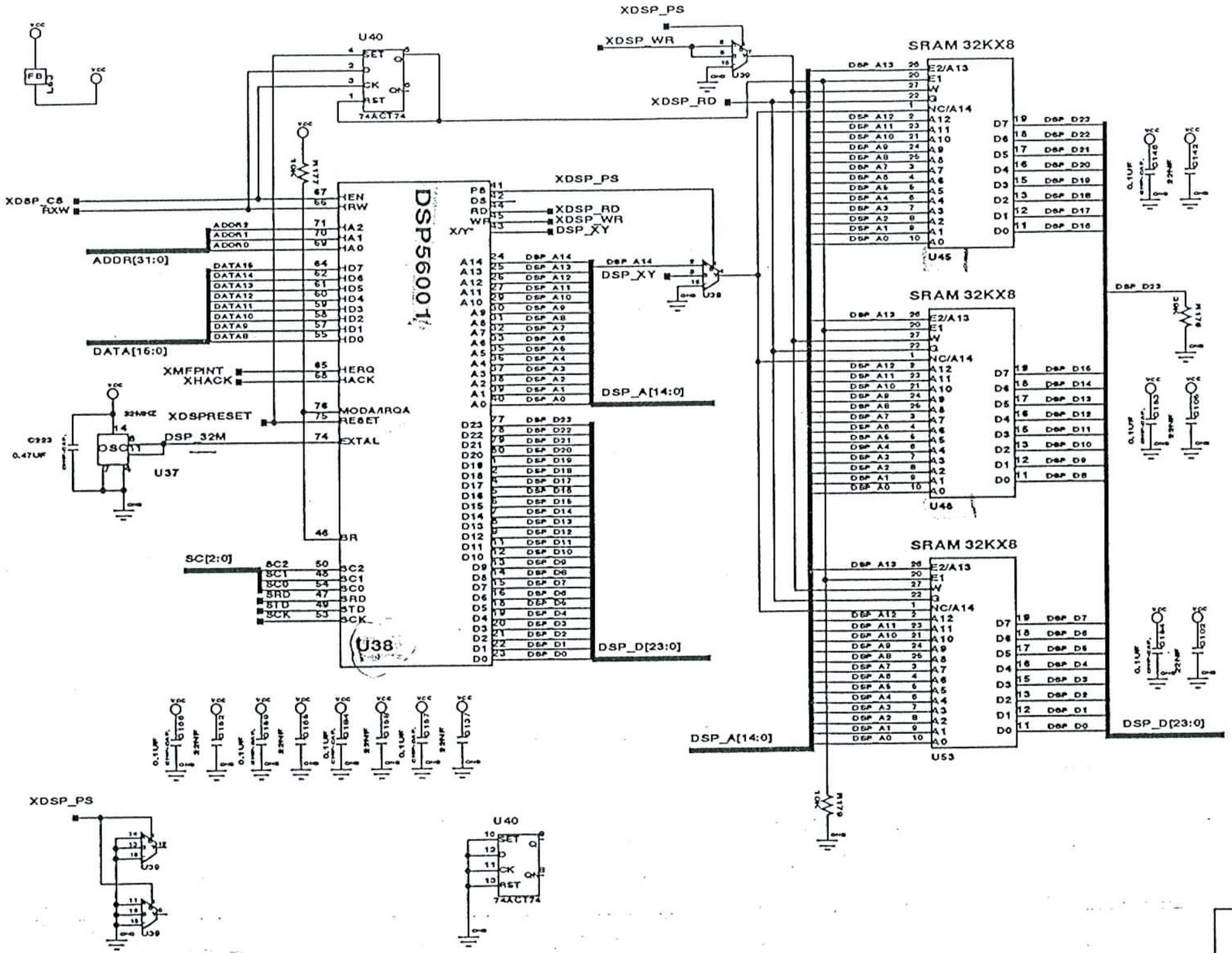

ATARI CORP.
1196 BORREGAS AVE.
SUNNYVALE, CA. 94089

TITLE			
FALCON030 SCHEMATIC			
SIZE D	CODE	NUMBER C303007-001	REV G
		SHEET 14 OF14	